PART NUMBER	TH'D "T"	A ±.062	B ±.062	C REF	D REF	E REF	F	G REF	H REF	K REF	R REF	PROCESS PER NOTE
FF5540–1212S	1 1/16–12	2.807	2.130	.86	.56	1.12	1.2525±.0025	1.62	1.00	1.25	1.25	1
FF5540–1612S	1 1/16–12	2.807	2.130	.86	.56	1.12	1.5625±.0025	1.88	1.31	1.56	1.25	1
FF5540–1616S	1 5/16–12	3.411	2.375	.91	.76	1.38	1.5625±.0025	1.88	1.31	1.56	1.50	1
FF5540–2016S	1 5/16–12	3.411	2.375	.91	.76	1.38	1.7525±.0025	2.12	1.50	1.75	1.50	1
FF5540–2020S	1 5/8–12	3.708	2.625	.96	.94	1.69	1.7525±.0025	2.12	1.50	1.75	1.75	2
FF5540–2416S	1 5/16–12	3.411	2.750	.91	.76	1.38	2.120±.005	2.50	1.88	2.12	1.50	1
FF5540–2420S	1 5/8–12	3.708	2.625	.96	.94	1.69	2.120±.005	2.50	1.88	2.12	1.75	2
FF5540–2424S	1 7/8–12	4.333	3.125	1.08	1.12	2.00	2.120±.005	2.50	1.88	2.12	2.00	2

G 1 F 1

REVISIONS			
REV.	DESCRIPTION	DATE	APPROVED
F	REDRAWN ON CAD – SUPERSEDES FF5540–S SHEET 1 OF 2 REV."E" AND FF5540–S SHEET 2 REV."E" (1).56 WAS .61, .76 WAS .84, .94 WAS 1.08, 1.12 WAS 1.31 & 1.62 WAS 1.78	4–6–92	EN–F12966 ER–F12966
G	(1)REMOVED FF5540–3232S	11–22–94 R.D.G.	EN–F15368 DP–1039
H	1) FINISH WAS ZINC PLATE PER ACES 16P47	2018–12–21 ARK/PSW	CO–0179211
J	1) ELBOW WAS "FC1109–24–501S".	2024–05–24 DDK/TMH	CO–0234765

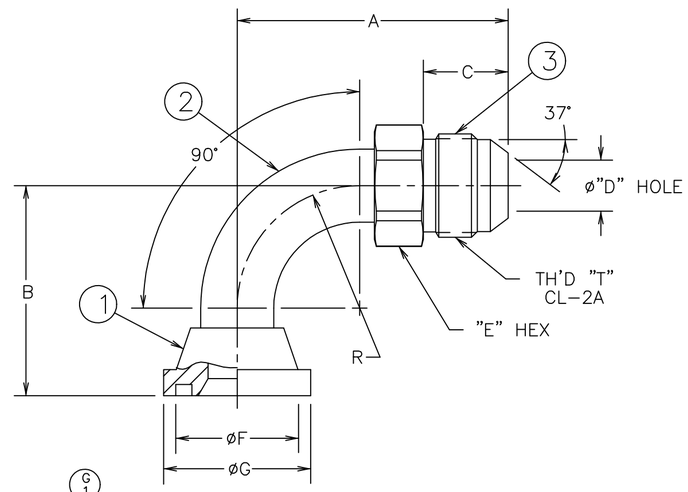

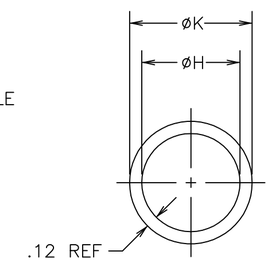

3 O'RING DETAIL

G 1

J 1

FF5540–2424S	FC1102–2424S	FC1109–24–001S	FF1505–2424S		
FF5540–2420S	FC1102–2420S	FC1109–20–501S	FF1505–2020S		
FF5540–2416S	FC1102–2416S	FC1109–16–502S	FF1505–1616S		
FF5540–2020S	FC1102–2020S	FC1109–20–501S	FF1505–2020S		
FF5540–2016S	FC1102–2016S	FC1109–16–501S	FF1505–1616S		
FF5540–1616S	FC1102–1616S	FC1109–16–501S	FF1505–1616S		
FF5540–1612S	FC1102–1612S	FC1109–12–001S	FF1505–1212S		
FF5540–1212S	FC1102–1212S	FC1109–12–001S	FF1505–1212S		
PART NUMBER	1 SHOULDER	2 ELBOW	3 ADAPTER		

LIST OF MATERIALS

ITEM NO.	MATERIAL
1	STEEL
2	STEEL
3	STEEL

4. SPLIT FLANGE FC3425–SIZE–217 USED ON THIS ASSEMBLY MUST BE ORDERED SEPARATELY. (2 REQUIRED)

3. O'RING SHOWN FOR REFERENCE ONLY. SUPPLIED BUT NOT FURNISHED WITH ASSEMBLY.

2. PROCESS AS FOLLOWS:
(a) BRAZE PER ACES 67P13.
(b) ZINC PLATE PER ES 2751D8. H 1

1. PROCESS AS FOLLOWS:
(a) BRAZE PER ACES 67P2. (ADAPTER ON SHORT TANGENT END FOR –2416 SIZE)
(b) ZINC PLATE PER ES 2751D8. H 1

FLUID CONVEYANCE DIVISION
MAUMEE, OHIO U.S.A.

Danfoss

EN–F12966
ER–F12966

CAGE CODE 01276

THIRD ANGLE PROJECTION

DIST U
SIZE A2
SCALE NONE
SHEET 1

DRAWN	R.D. GARRETT
CHECKED	R.D. GARRETT
APPROVED	R.D. GARRETT
RELEASE DATE	1992–04–06

DRAWING INTERPRETATION PER ES 10

DRAWING TITLE
ELBOW ASSEMBLY
90°, SPLIT FLANGE TYPE (CODE 62) TO SAE 37° MALE FLANGE

DRAWING NUMBER FF5540–S
REV J

THE REPRODUCTION, DISTRIBUTION, AND UTILIZATION OF THIS DOCUMENT AS WELL AS THE COMMUNICATION OF ITS CONTENTS TO OTHERS WITHOUT EXPLICIT AUTHORIZATION IS PROHIBITED. OFFENDERS WILL BE HELD LIABLE FOR THE PAYMENT OF DAMAGES. ALL RIGHTS RESERVED IN THE EVENT OF THE GRANT OF A PATENT, UTILITY MODEL OR DESIGN. (PER ISO 16016)