SYM	REVISION	BY	DATE	ECN
A	ENGINEERING RELEASE	RLL	11-10-87	14736
B	.42/10,7 MIN. DP. WAS .56/14,2 MIN. DP.	RAF	6-14-94	25639

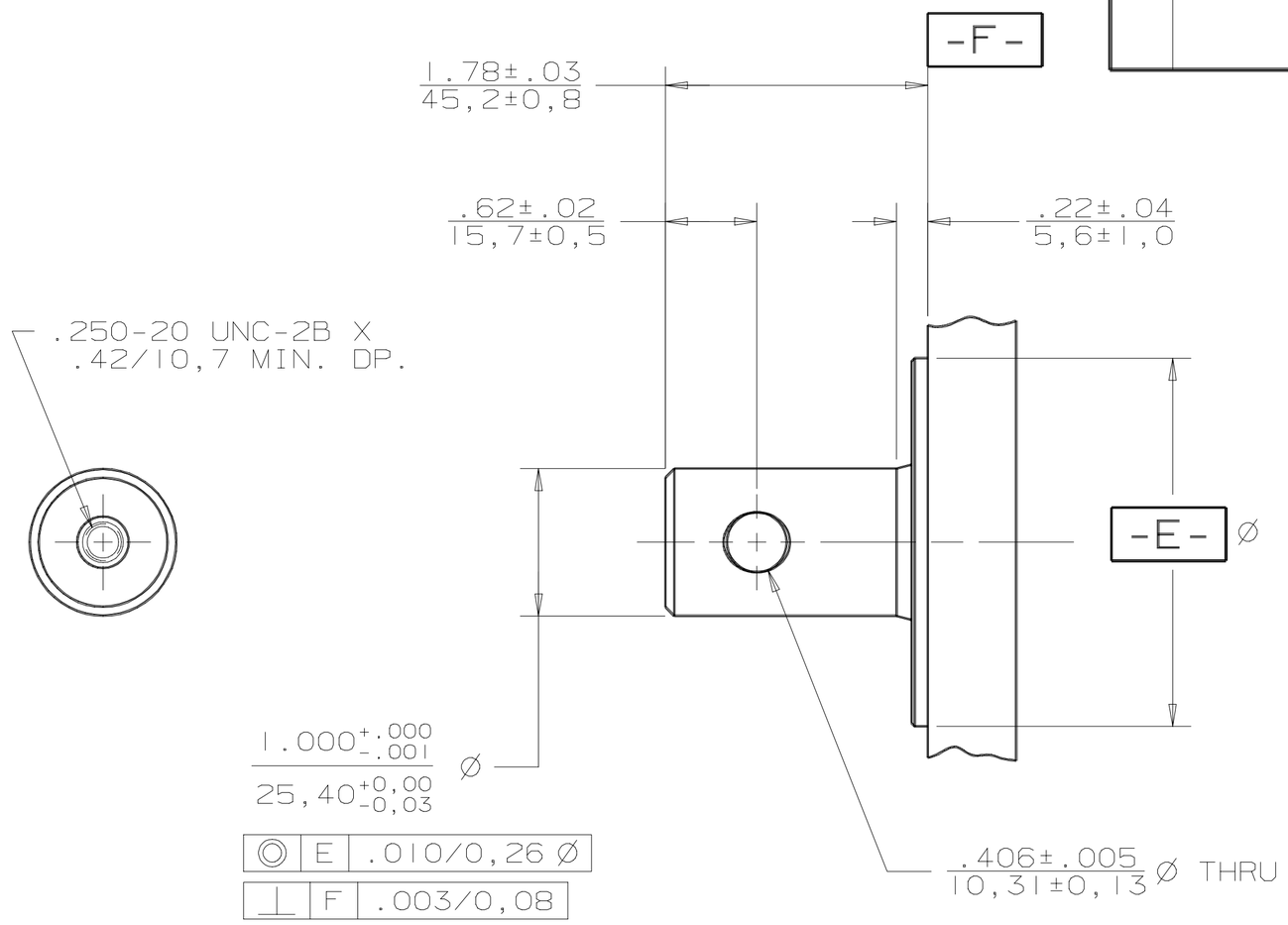

MODEL NO.

MOXXXX08XXXXXX

SMG 2

THE REPRODUCTION, DISTRIBUTION, AND UTILIZATION OF THIS DOCUMENT, AS WELL AS THE COMMUNICATION OF ITS CONTENTS TO OTHERS WITHOUT EXPLICIT AUTHORIZATION IS PROHIBITED. OFFENDERS WILL BE HELD LIABLE FOR THE PAYMENT OF DAMAGES. ALL RIGHTS RESERVED IN THE EVENT OF THE GRANT OF A PATENT, UTILITY MODEL, OR DESIGN. (PER ISO 16016)

Danfoss

DRAWN BY/DATE RLL 10-29-87

CHECKED BY/DATE KQ 1-13-88

ENGRG BY/DATE WCW 1-19-88

DO NOT SCALE

MATERIAL/HEAT TREAT

TITLE SHAFT INSTALLATION

THIRD ANGLE PROJECTION

LINEAR MEASUREMENT IN/MM IN MM

NUMBER A-109-008

SCALE FULL SIZE SHEET 1 OF 1

OUTPUT SHAFT

08 = 1.00/25,4 DIA. STRAIGHT WITH .40/10,2 DIA. CROSSHOLE .62/15,7 FROM END, AND .250-20 THREADED HOLE